Constructor University Bremen

Natural Science Laboratory
Electronics

Fall Semester 2025

Lab Experiment 5 – Metal Oxide Field Effect Transistor

Data Experiment 6 – CMOS Inverter and Logic Gates

Author of the report Mr. Nikoloz Burduli

Experiment conducted by	: Mr. Nikoloz Burduli, Mr. Thushar Venkataramanaiah, Mr Jamal Salimov.
Place of execution	: Teaching Lab 53
Date of execution	: November 03, 2025

1. Introduction

The objective of this experiment is to become familiar with the fundamental properties and operation of Metal Oxide Semiconductor Field Effect Transistors (MOSFETs), one of the most commonly used transistor types alongside BJTs. Unlike BJTs, MOSFETs are voltage-controlled components with a very high input impedance, making them ideal for applications in both amplification and switching.

The experiment was carried out in two main stages. The first stage involved studying the current–voltage (I/V) characteristics of the MOSFET by varying the gate-to-source (V_{GS}) and drain-to-source (V_{DS}) voltages to examine its response in the cutoff, linear, and saturation regions. From these observations, key parameters such as the threshold voltage (V_{th}) and drain current (I_D) were determined. Measurements were taken carefully and promptly to minimize the effect of self-heating on the readings.

In the second stage, the MOSFET was configured as an amplifier to observe its signal amplification behavior. The resulting waveforms were recorded, analyzed, and compared to theoretical expectations to better understand the device's performance in practical applications.

1.1 Prelab Problem 1 – Metal Oxide Semiconductor Field Effect Transistors (MOSFET)

1. Explain the differences between an enhanced and depletion MOSFET.

Enhancement and depletion MOSFETs differ mainly in their structure, operating principle, and default state of conduction. An enhancement-type MOSFET (E-MOSFET) is normally off when no gate-to-source voltage (VGS) is applied, meaning that there is no current flow between the drain and source at $V_{GS} = 0$. To allow current to pass, a gate voltage greater than the threshold voltage (V_{th}) must be applied for an n-channel MOSFET, or less than V_{th} for a p-channel MOSFET.

In contrast, a depletion-type MOSFET (D-MOSFET) is normally on even when $V_{GS} = 0$, allowing current to flow between the drain and source without any gate voltage applied. To reduce or completely stop the current flow, a gate voltage of opposite polarity to the channel type is applied negative for n-channel and positive for p-channel devices. Thus, the enhancement MOSFET requires a gate voltage to turn on, while the depletion MOSFET requires a gate voltage to turn off.

2. Explain the differences between an NMOS and PMOS transistor.

NMOS and PMOS transistors differ primarily in the type of charge carriers responsible for conduction and in how they respond to gate voltage. An NMOS transistor has n-type source and drain regions and uses electrons as the main charge carriers. It turns on when a positive gate-to-source voltage is applied. In contrast, a PMOS transistor has p-type source and drain regions and conducts through holes as the majority carriers. It becomes active when the gate voltage is low or negative relative to the source.

Because electrons have higher mobility than holes, NMOS transistors generally offer faster operation and lower resistance than PMOS devices. For this reason, both transistor types are often combined in complementary configurations, such as CMOS circuits, to achieve efficient and balanced performance.

1.2 Prelab Problem 2 – MOSFET as Amplifier

The following circuit is given:

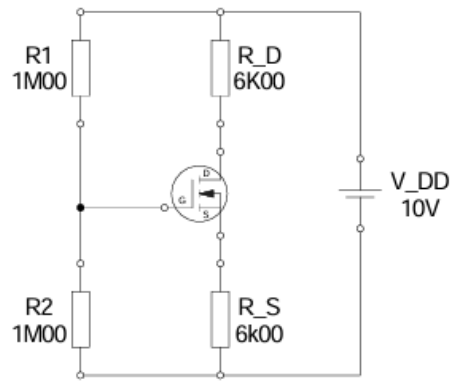

Figure 1: Common Source Amplifier Circuit

1. Determine the gate-source and drain-source voltage and the drain current for the MOSFET amplifier.

2. Show that the MOSFET indeed operates in the saturation region.

Since the transistor is considered to be operating in the saturation region, the drain-to-source current can be expressed by the following relationship:

$$I_{DS} = \mu_n C_G \frac{W}{2L}(V_{GS} - V_{th})^2 = k * (V_{GS} - V_{th})^2 \quad where\ k = 0.5\frac{mA}{V^2}\ \ and\ V_{th} = 1\,V$$

$$V_G = V_{DD}\frac{R_1 R_2}{R_1 + R_2} = 10 * \frac{10^6}{(1+1) * 10^6} = 5\,V$$

$$V_{GS} = V_G - V_S \quad and \quad V_{DS} = V_D - V_S$$

The gate-to-source voltage V_{GS}, drain-to-source voltage V_{DS}, and drain current I_D of the MOSFET amplifier were calculated using the corresponding theoretical relationships given below.

$$I_{DS} = k(V_{GS} - V_{th})^2 = \frac{V_G - V_{GS}}{R_S} \rightarrow 0.5 * 10^{-3}(V_{GS} - 1)^2 = \frac{5 - V_{GS}}{6000}$$

$$0.5 * 10^{-3} V_{GS}^2 - 10^{-3} + 0.5 * 10^{-3} = \frac{5 - V_{GS}}{6000}$$

$$V_{GS1} = -\frac{1}{3} \quad or \quad V_{GS2} = 2\ V$$

$$V_S = V_G - V_{GS} = 5 - 2 = 3\ V$$

$$I_{DS} = \frac{V_S}{R_S} = \frac{3}{6000} = 0.5\ mA$$

$$V_D = V_{DD} - R_D I_D = 10 - 6000 * 0.5 * 10^{-3} = 7\ V$$

$$V_{DS} = 7 - 3 = 4\ V$$

For a MOSFET to operate in the saturation region, two conditions must be satisfied: the gate-to-source voltage must exceed the threshold voltage ($V_{GS} > V_{th}$), and the drain-to-source voltage must be greater than the difference between the gate-to-source and threshold voltages ($V_{DS} > V_{GS} - V_{th}$). In this case, with V_{GS} = 2V and V_{th} = 1V, the first condition is met since 2V > 1V. Similarly, V_{DS} = 4V and $V_{GS} - V_{th}$ = 1V, giving 4V > 1V, which satisfies the second condition. Thus, it can be concluded that the MOSFET operates in the saturation region.

1.3 Prelab Problem 3 – MOSFET as Switch

The following Circuit is given:

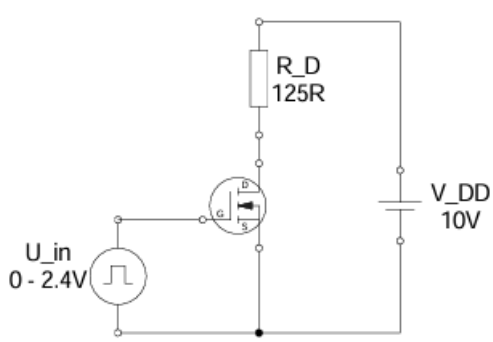

Figure 2: Switch MOSFET Circuit

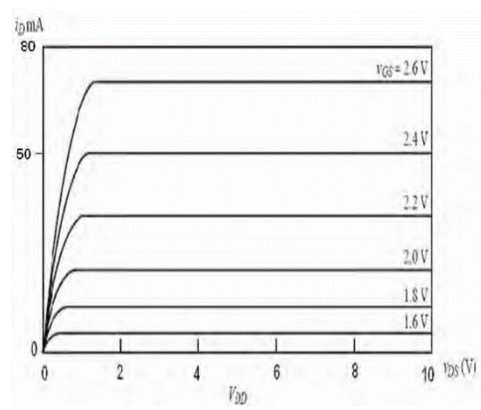

Figure 3: Output Characteristic of the MOSFET as a Switch

The MOSFET is used as a switch. The input signal of the circuit varies between 0V and 2.4V. Determine the operating point for both input voltages.

The operating point of the MOSFET was determined for two different input voltages using the figures above (Figure 2 and Figure 3).

Cuttof Region:

For V_{in} = 0V, the gate-to-source voltage is V_{GS} = 0V and the drain current is I_D = 0A, with V_{DD} = 10V. The drain-to-source voltage is calculated as:

$$V_{DS} = V_{DD} - I_D R_D = 10 - 125 * 10 = 10\,V$$

Linear Region:

For V_{in} = 2.4V, the gate-to-source voltage becomes V_{GS} = 2.4V and the drain current is I_D = 50mA. The corresponding drain-to-source voltage is:

$$V_{DS} = V_{DD} - I_D R_D = 10 - (50 * 10^{-3})125 = 3.75\,V$$

This shows how the operating point shifts from cutoff to the linear region as the input voltage increases.

2. Execution – Set-up and Results

Tools and Equipment

- 50Ω, 180Ω and 100kΩ resistors
- 2N7000 MOSFET
- Breadboard
- Oscilloscope for measurement
- Function Signal Generator
- TENMA Multimeter.
- ELABO Mulitmeter.

2.1 Execution Problem 1 – I/V Characteristic of a MOSFET

The aim of this section of the experiment is to measure the current–voltage (I–V) characteristics of the MOSFET and to examine how it behaves in its different operating regions.

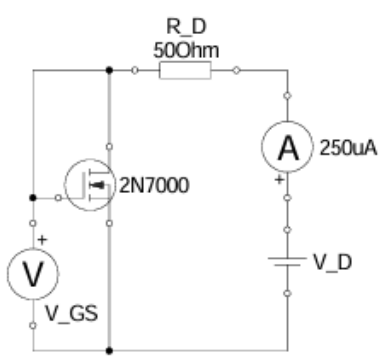

$$V_{th} = 2.046\,V \quad and \quad I_D = 251.33\,A$$

Figure 4: U_{th}=U_{GS}=U_{DS} when I_D=250uA. Circuit to measure U_{th} and I_D

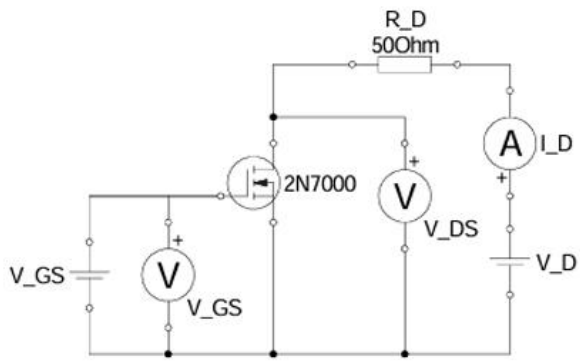

Figure 5: The Circuit to measure the transfer characteristic

For the first part of the experiment, the circuit was assembled as shown in the relevant diagram, and the threshold voltage V_{th} = 2.076 V along with the drain current I_D = 251.33 mA were measured using TENMA and ELABO multimeters.

In the second part, the circuit setup kept the drain-to-source voltage V_{DS} constant at 5 V while the gate-to-source voltage V_{GS} was varied from 0 V to 3 V. The switching was performed rapidly to minimize the effects of MOSFET heating on the measurements. V_{DS} was measured with the TENMA multimeter, and V_{GS} and I_D were recorded using ELABO and TENMA instruments, respectively.

For the third part, V_{GS} was held constant while V_{DS} was varied, and measurements were taken for both V_{DS} and I_D. This procedure was repeated for V_{GS} = 2V, 2.2V, 2.4V and 2.6V . All collected data were organized into tables, which are presented in the Results section.

V_{DS}, V	V_{GS}, V	I_D, mA
5	0	0
	1.041	0
	1.631	0
	1.848	0.011
	1.952	0.054
	2.03	0.153
	2.157	0.656
	2.253	1.709
	2.324	3.155
	2.421	6.622
	2.514	45.51
	2.609	49.5
	2.712	55.25
	2.841	6.48
	2.914	63.31
	3.069	71.21

Table 1: I_D Values for different V_{GS} for V_{DS} = 5V

V_GS, V	V_DS, V	I_D, mA
2.052	0	0.038
	0.2432	0.141
	0.5636	0.161
	1.0304	0.183
	1.5183	0.187
	2.0339	0.19
	2.5337	0.193
	3.0249	0.195
	3.5486	0.197
	4.062	0.201

Table 2: I_D Values for different V_{DS} for V_{GS} = 2V

V_GS, V	V_DS, V	I_D, mA
2.237	0.0067	0.131
	0.1628	1.125
	0.4519	1.244
	1.0141	1.299
	1.4624	1.324
	1.9852	1.347
	2.4926	1.366
	2.9673	1.387
	3.4723	1.407
	3.978	1.427

Table 3: I_D Values for different V_{DS} for V_{GS} = 2.2V

V_GS, V	V_DS, V	I_D, mA
2.052	0.0052	0.733
	0.1079	11.168
	0.3078	18.235
	0.5078	17.029
	0.7097	16.448
	1.0005	16.939
	1.5786	20.283
	2.0477	24.022
	2.5024	27.945
	3.0077	32.572

Table 5: I_D Values for different V_{DS} for V_{GS} = 2.6V

V_GS, V	V_DS, V	I_D, ma
2.427	0.0029	0.189
	0.568	2.723
	0.0694	3.12
	0.1031	3.92
	0.1639	4.759
	0.2357	5.241
	0.3542	5.595
	0.4146	5.692
	0.5139	5.814
	0.5873	5.993
	0.7376	6.527
	1.1054	8.563
	1.4295	10.757
	1.7849	13.45
	2.0969	16.01
	2.4336	18.938
	2.763	21.875
	3.5463	29.076
	3.98	33.043

Table 4: I_D Values for different V_{DS} for V_{GS} = 2.4V

2.2 Execution Problem 2 – MOSFET as Amplifier

The aim of this section of the experiment is to design, construct, and study the performance of an amplifier circuit based on a MOSFET.

\

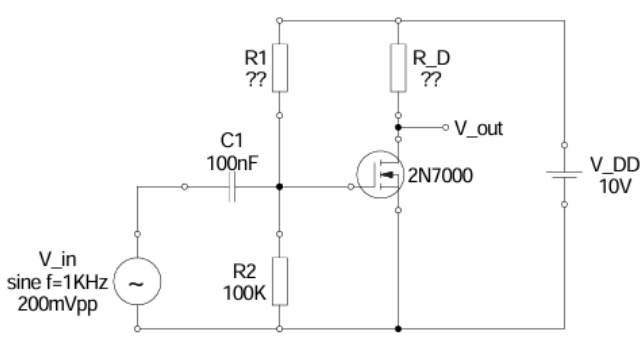

Figure 6: V_{GS} = 2.7V, V_{DS} = 5V, k = 72.2 mA/V^2, U_{th} = measured value

Function Generator Settings:

Wave – Sine
Frequency – 1 kHz
Amplitude – 100 mV_{pp}
No offset

To set up the circuit for this task, the values of R_1 and R_D were first calculated using Thevenin's equivalent method. Observing the circuit diagram, R_D is connected in the branch parallel to V_{DD}, and the current flowing through it is I_{DS}. This allows the following equation to be established:

$$R_D = \frac{V_{DD} - V_{DS}}{I_{DS}} = \frac{10 - 5}{k(V_{GS} - V_{th})^2} = \frac{5}{72.2 * 10^{-3}(2.7 - 2.076)^2} = 177.854\ \Omega$$

From the previous calculations, a resistor of 180 Ω was selected for the circuit.

To determine the value of R_1, it should be noted that the branch containing R_1 is also in parallel with V_{DD}. Since the capacitor acts as an open circuit in the Thevenin equivalent model, the current through R_1 is equal to the current through R_2. The voltage across R_2 corresponds to V_{GS}. Using this relationship, the equation can be formed and the values substituted as follows:

$$R_1 = \frac{V_{DD} - V_{GS}}{\frac{V_{GS}}{R_2}} = \frac{10 - 2.7}{\frac{2.7}{100 * 10^3}} = 270370.370\ \Omega$$

The circuit was assembled using R_D = 180 Ω and R_1 = 270 k Ω. The function generator settings are provided above. It should be noted that although the input amplitude $V_{in\text{-}pp}$ was set to 100 mV, the measured input signal shown in the hardcopy was approximately 200 mV. This discrepancy is due to the internal 50 Ω resistance of the function generator.

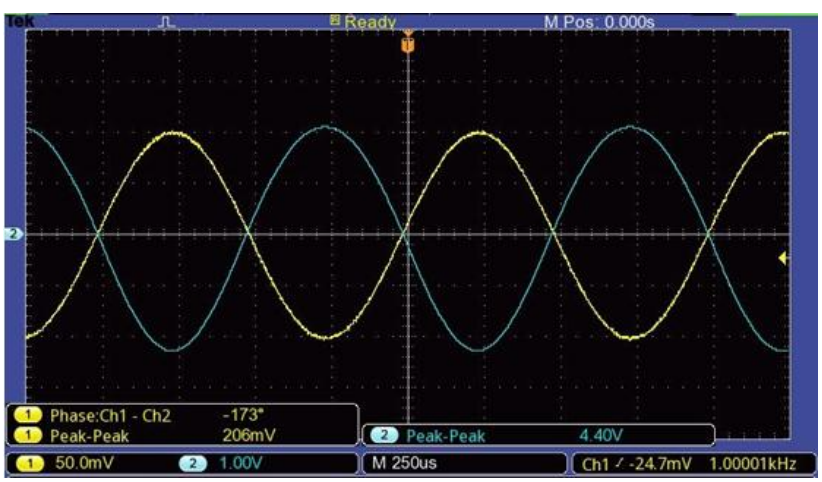

Figure 7: Input and Output signals and the phase difference between them

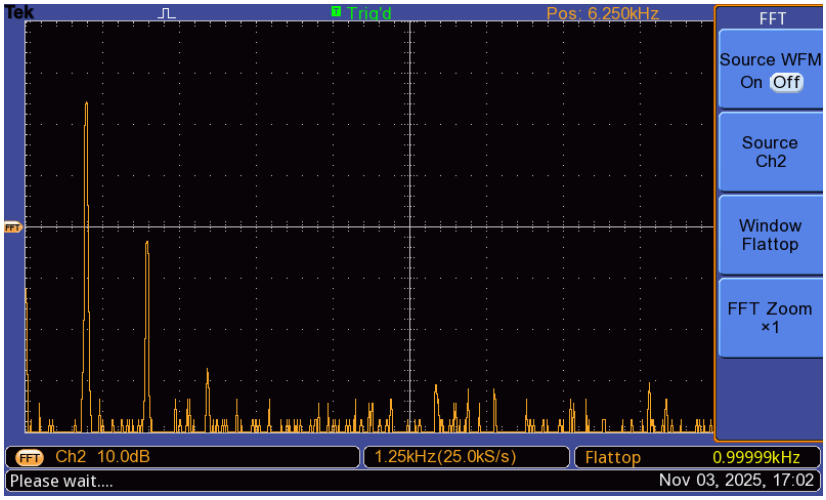

Figure 8: FFT of Output Signal

3. Evaluation

3.1 Evaluation Problem 1 – I/V Characteristic of a MOSFET

1. Plot the measured transfer characteristic

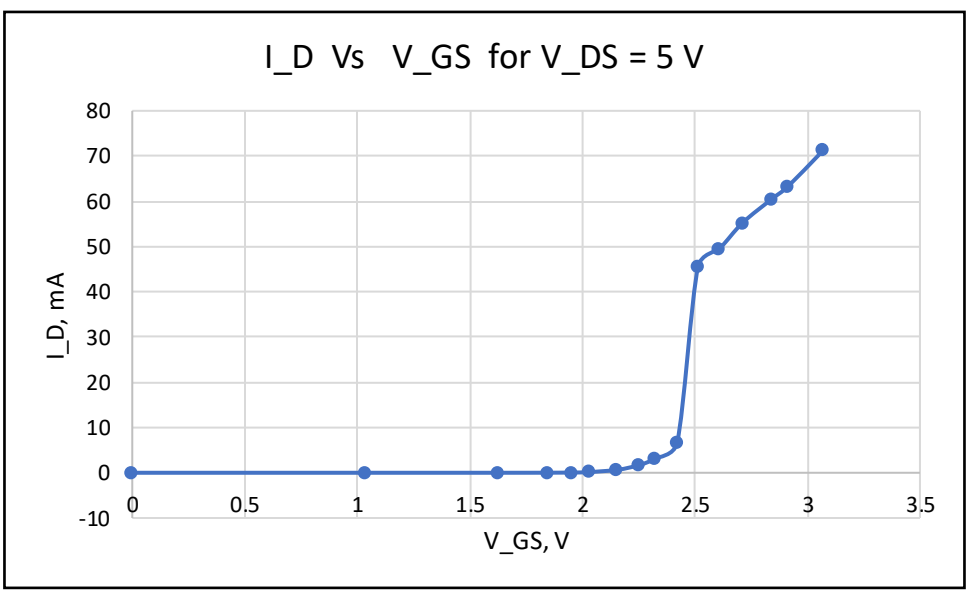

Plot 1: MOSFET Transfer Characteristic

When the gate-to-source voltage V_{GS} is below the threshold voltage V_{th}, the MOSFET remains in the cutoff region and the drain current I_D is zero. Once V_{GS} exceeds the threshold, at V_{GS} = 2.076 V, the drain current begins to rise, as illustrated in the plot above.

2. Plot the measured output characteristic for the different gate source voltages $V_{DS} = V_{GS} - V_{th}$ line inserted into output characteristics

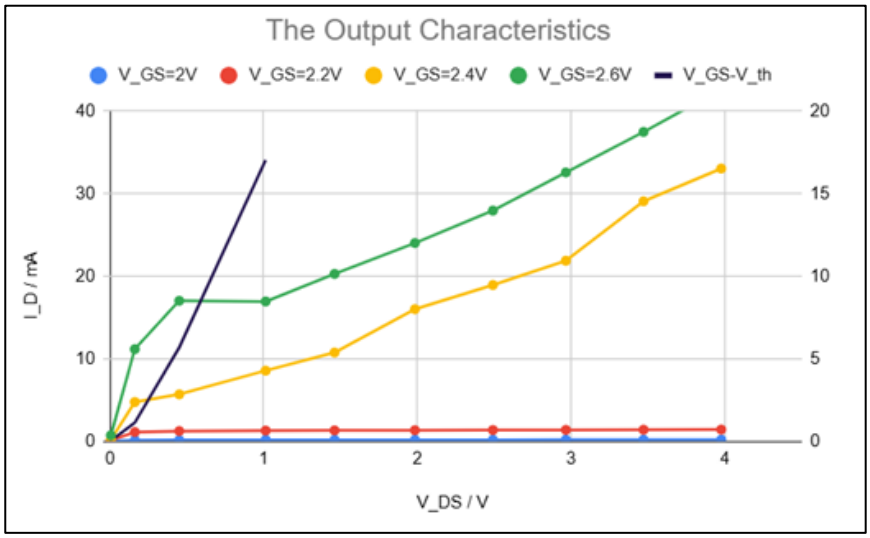

Plot 2: MOSFET Output Characteristic

$$V_{DS} = 2.237 - 2.076 = 0.161\ V$$

$$V_{DS} = 2.247 - 2.076 = 0.351\ V$$

$$V_{DS} = 2.645 - 2.076 = 0.569\ V$$

From the plot, it can be seen that in the saturation region, the drain current I_D should ideally remain almost constant as the drain-to-source voltage V_{DS} increases. However, in this case, I_D shows a noticeable increase due to heating of the MOSFET, which alters its characteristics. To reduce this effect, it is recommended to either allow the transistor to cool between measurements or perform the experiment quickly to minimize the impact of temperature rise.

3.2 Evaluation Problem 2 – MOSFET as Amplifier

1. A MOSFET functions as an amplifier when it operates in the saturation region. The main goal of a MOSFET amplifier is to reproduce the input signal at the output with increased amplitude while maintaining its shape. To achieve this, the MOSFET must be properly biased so that it stays within the saturation region.

In this region, also called the constant current region, the drain current I_D is almost constant for a given gate-to-source voltage V_{GS} above the threshold voltage V_{th}. Here, I_D mainly depends on V_{GS} and becomes largely independent of the drain-to-source voltage V_{DS}. This behavior allows small

variations in V_{GS} to produce proportional changes in I_D, enabling the MOSFET to amplify the input signal accurately.

2. Clipping occurs in an amplifier when the output voltage is limited because the input signal drives the MOSFET beyond its linear operating range, causing the transistor to leave its active region. To avoid clipping, the maximum allowable input voltage can be calculated using the following formula:

$$V_{in-max} = \frac{V_{DD}}{V_{out}} * V_{in}$$

$$V_{DD} = 10\,V, V_{in} = 0.206\,V \; and \; V_{out} = 4.4\,V \; (measured)$$

$$V_{in-max} = \frac{10}{4.4} * 0.206 = 0.4681\,V$$

This value represent the largest possible value of the input.

3. Theoretical Voltage Gain:

$$V_{in} = 0.2\,V$$

$$V_{out} = V_{DD} - R_D I_D \;\rightarrow\; V_{out} = V_{DD} - R_D k(V_{GS} - V_{th})^2$$

$$Gain = \frac{V_{out}}{V_{in}} = \frac{V_{DD} - R_D k(V_{GS} - V_{th})^2}{V_{in}} = \frac{10 - 177.854 * 72 * 10^{-3}(2.7 - 2.076)^2}{0.2} = 25$$

4. Measured Voltage gain:

$$Gain = \frac{V_{out}}{V_{in}} = \frac{4.4}{0.206} = 21.36$$

Since the calculated theoretical value of R_1 was approximately 270.37 kΩ, a standard 270 kΩ resistor was selected for the circuit. Similarly, the theoretical value of R_D = 177.85Ω was replaced with a standard 180Ω resistor. These substitutions, along with other non-ideal factors, resulted in slight differences between the measured and theoretical values.

The variation between the theoretical and measured voltage gain can be attributed to several sources of error, including component tolerances, parasitic resistances and capacitances, and the inherent deviation range of the signal generator and oscilloscope. Additionally, MOSFET performance is highly sensitive to temperature changes heating during operation alters its parameters, which in turn affects the accuracy of the measured results.

5. From the obtained results, it can be concluded that the output voltage is inverted with respect to the input signal, resulting in a 180° phase shift between them, as observed in the corresponding figure. In the amplifier circuit, an increase in the gate-source voltage V_{GS} leads to a higher drain

current I_D, which in turn causes a larger voltage drop across the drain resistor R_D. Consequently, the output voltage decreases, producing an inverted output waveform characteristic of a common-source MOSFET amplifier.

4. Conclusion

In this experiment, the structure, characteristics, and performance of a MOSFET were investigated under various operating conditions. The I–V characteristics were examined to understand how the device behaves in cutoff, linear, and saturation regions based on the applied gate-source and drain-source voltages. The threshold voltage V_{th} was measured, and transfer characteristics were plotted by varying V_{GS} while keeping V_{DS} constant. When $V_{GS} < V_{th}$, the transistor remained in the cutoff region with negligible current flow. In the linear region, where $V_{DS} < V_{th}$, the drain current I_D increased proportionally with V_{DS}. In the saturation region, defined by $V_{DS} \geq V_{GS} - V_{th}$, I_D ideally remained constant; however, minor deviations were observed due to self-heating of the MOSFET, which could be minimized by taking faster readings or allowing the device to cool between measurements.

In the second part, the MOSFET was implemented as an amplifier. The circuit was designed, built, and analyzed with the device biased in the saturation region to achieve effective amplification. It was observed that increasing V_{GS} increased I_D, causing a greater voltage drop across the load resistor and resulting in an output signal inverted relative to the input — corresponding to a 180° phase shift. The maximum allowable input amplitude before clipping was experimentally determined as $V_{in\text{-}max} = 0.4681$ V. Both theoretical and measured voltage gains were compared, with only minor discrepancies observed, primarily due to component tolerances, parasitic effects, measurement limitations, and temperature sensitivity of the MOSFET.

Overall, the experiment successfully demonstrated the operation of a MOSFET as both a switching element and a small-signal amplifier, providing valuable insight into its electrical characteristics and practical performance.

5. References

- http://uwp-cu-lab.my-board.org/02.0.adveelab/02.1.signalsys/20240829-co-520b_manual.pdf

6. Appendix

6.1 Prelab

6.1.1 Prelab Problem 1 – Voltage Transfer Characteristic of a CMOS inverter

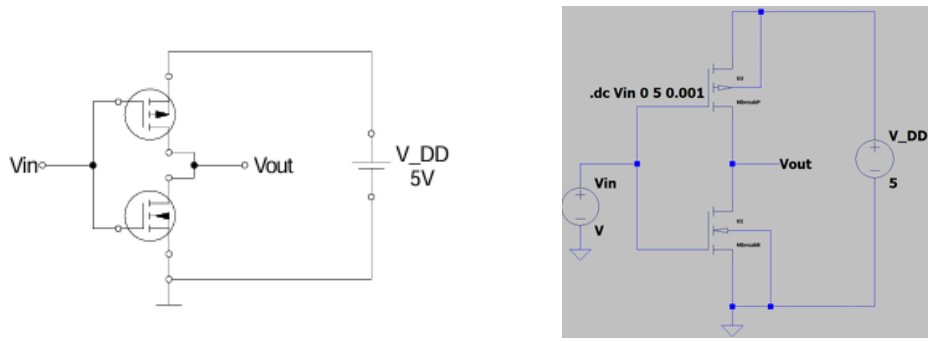

Figure 9: CMOS Inverter Circuit

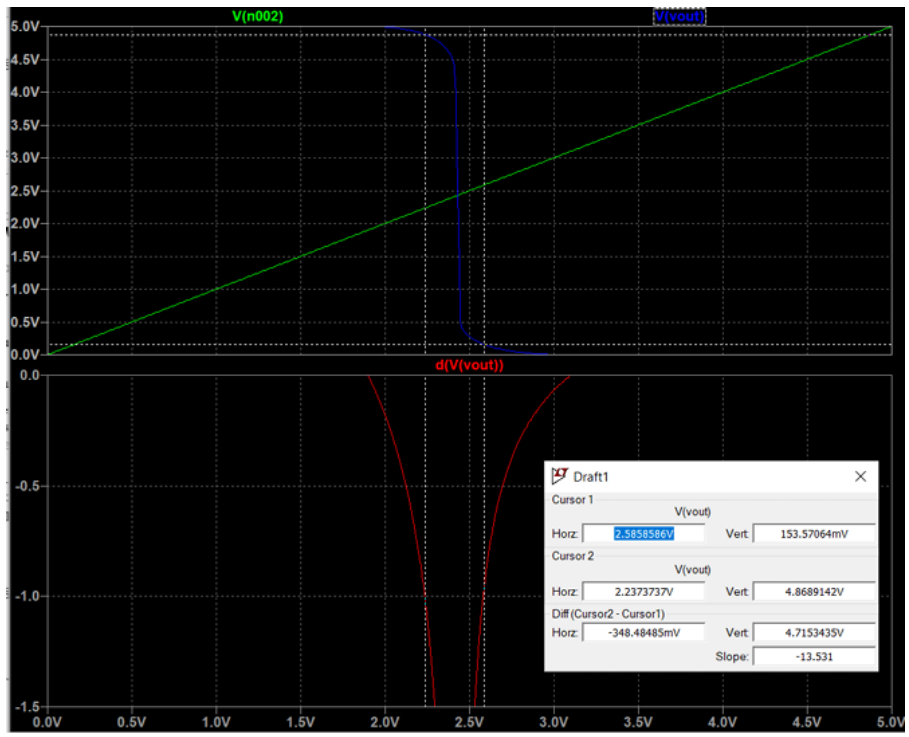

Figure 10: Voltage Transfer Characteristic and d() function Plot

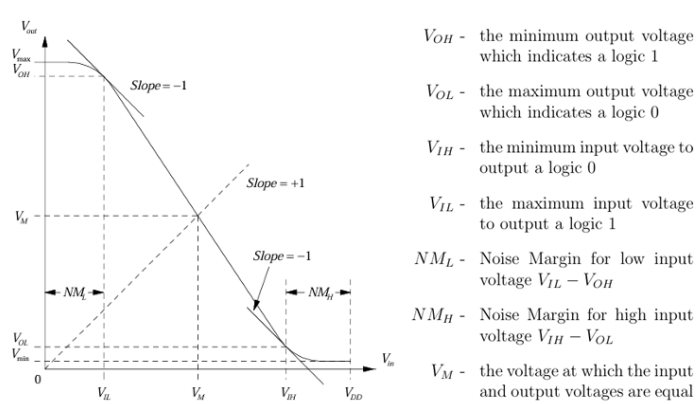

Figure 11: Plot for determination of the values

Parameter	Value, V
V_OH	4.869
V_OL	153.571 mV
V_IH	2.586
V_IL	2.237
NM_L	2.237
NM_H	2.414
V_th	2.43

Table 6: Voltage Values extracted from the plot

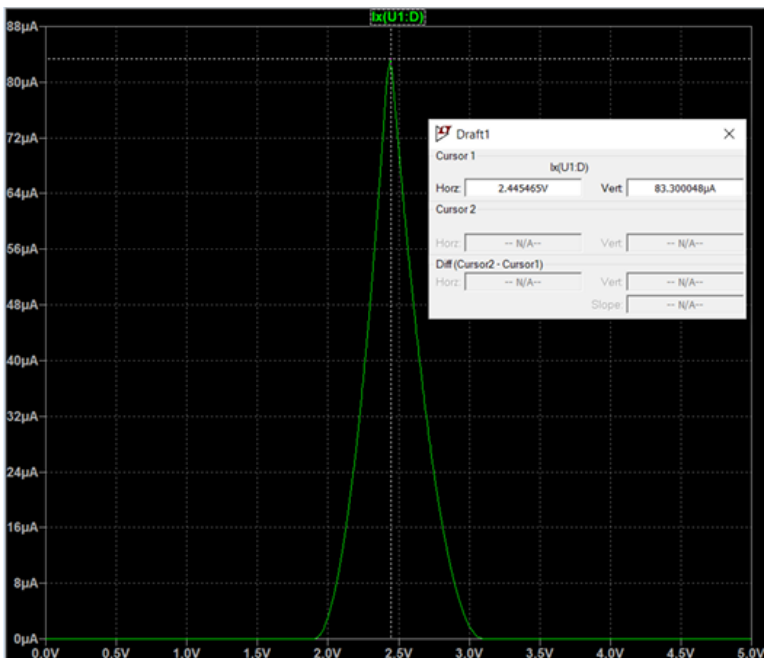

Figure 12: The current flowing through the inverter Vs input Voltage

According to the simulation results, the current reaches its peak value of 83 µA when the input voltage V_{in} = 2.45V. This occurs when both the NMOS and PMOS transistors are conducting simultaneously. At this point, the NMOS begins to turn on since V_{GS} exceeds the threshold voltage V_{th}, while the PMOS remains on because its V_{GS} is still greater than its threshold voltage in magnitude. As a result, both transistors briefly conduct at the same time, creating a direct current path between the supply and ground, known as a short-circuit current, which causes the current to reach its maximum value. Once either transistor fully switches off, the current decreases sharply.

6.1.2 Prelab Problem 2 – CMOS Inverter with Capacitive Load

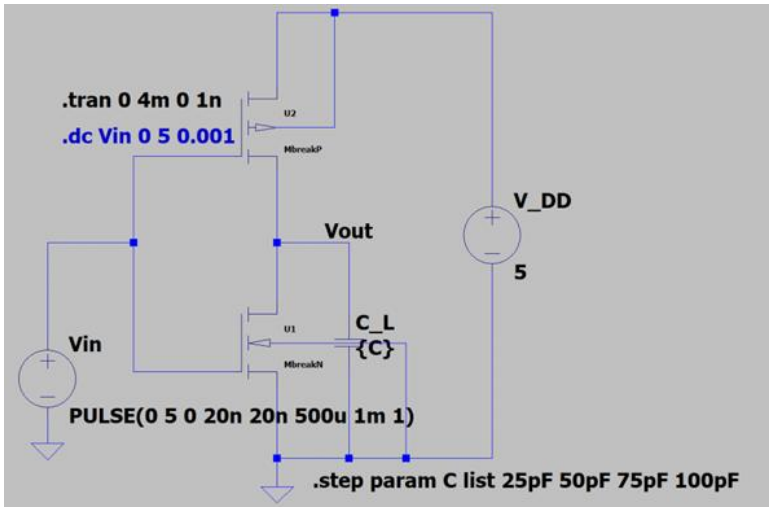

Figure 13: CMOS Inverter with Capacitive Load Circuit

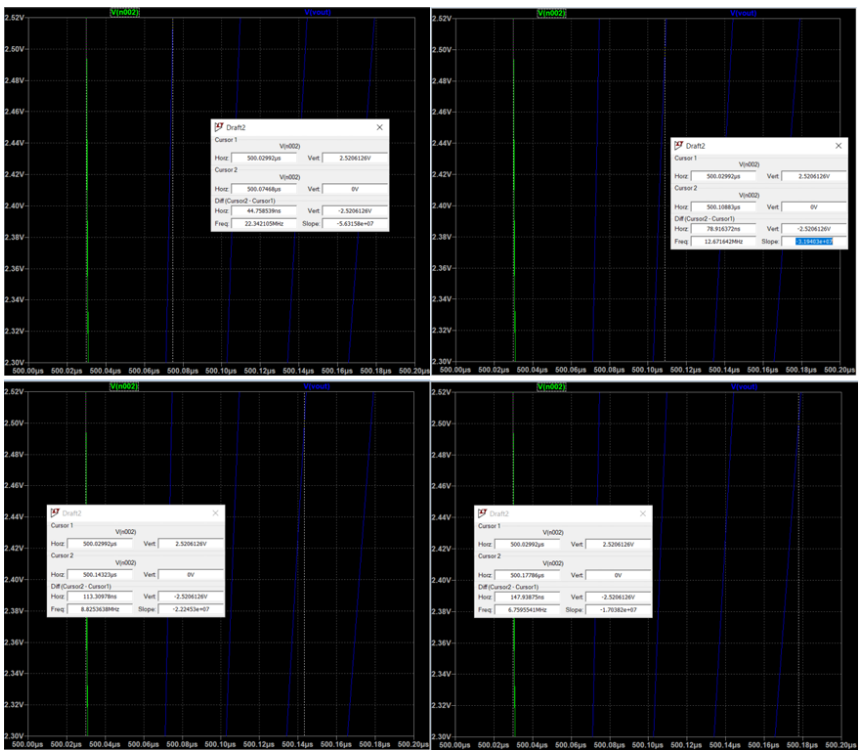

Figure 14: The propagation delay t_{PLH} and t_{PHL}

Capacitance, pF	$t_{PLH} = t_{PHL}$, ns
25	44.759
50	48.916
75	113.31
100	147.939

Table 7: Propagation delay for different values of capacitance

The dynamic power dissipation of the CMOS inverter for different load capacitors was calculated using the following formula:

$$P_D = fCV_{DD}^2$$

$$C = 25\ pF:\ P_D = 1000 * 25 * 10^{-12} * 5^2 = 0.625\ \mu W$$

$$C = 50\ pF:\ P_D = 1000 * 50 * 10^{-12} * 5^2 = 1.25\ \mu W$$

$$C = 75\ pF:\ P_D = 1000 * 75 * 10^{-12} * 5^2 = 1.875\ \mu W$$

$$C = 100\ pF:\ P_D = 1000 * 100 * 10^{-12} * 5^2 = 2.5\ \mu W$$

6.1.3 Prelab Problem 3 – Propagation Delay of an Inverter Stage

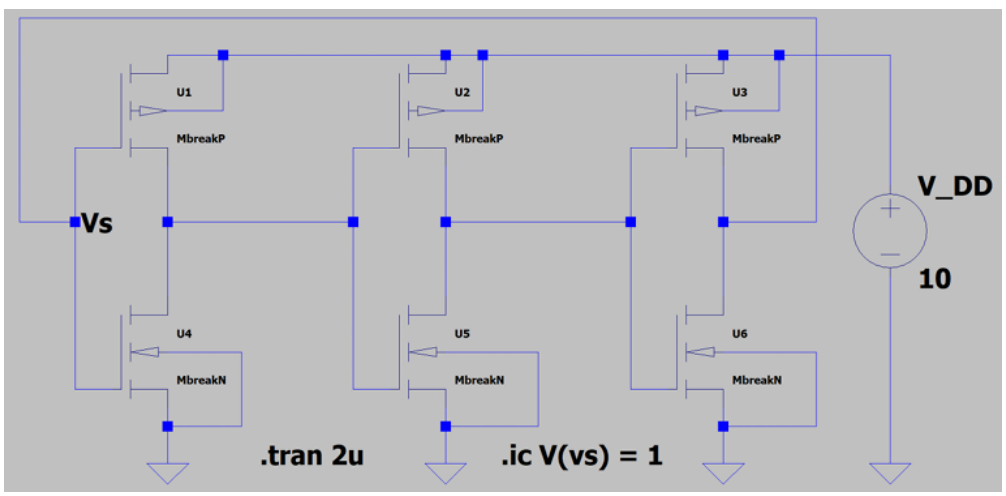

Figure 15: The 3-stage Ring Oscillator

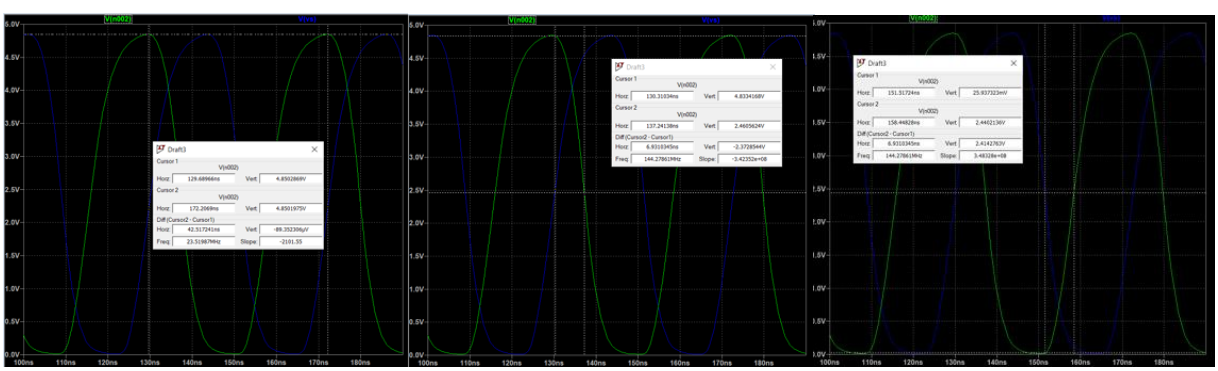

Figure 16: Oscillation frequency of the ring oscillator and propagation delay for 5V

Vs, V	f, mHz	t_PHL, ns	t_PLH, ns
3	3.293	43.349	43.349
5	23.52	6.931	6.931
7	55.153	2.983	2.867
10	121.746	1.438	1.515

Table 8: Oscillation frequency of the oscillator and propagation delay for different voltages

The observed difference between the values of t_{PHL} and t_{PLH} can be attributed to human error, as the measurements were taken using cursors, whose manual placement limits accuracy. In theory, both t_{PHL} and t_{PLH} should be equal.

The dynamic power dissipation was calculated using the following formula:

$$P_D = fCV_{DD}^2$$

$$V = 3V\colon\ P_D = 3.293 * 10^6 ** 10 * 10^{-12} * 3^2 = 0.296\, mW$$

$$V = 5V\colon\ P_D = 23.52 * 10^6 * 10 * 10^{-12} * 5^2 = 5.88\, mW$$

$$V = 7V\colon\ P_D = 55.153 * 10^6 * 10 * 10^{-12} * 7^2 = 27.025\, mW$$

$$V = 10V\colon\ P_D = 121.746 * 10^6 * 10 * 10^{-12} * 10^2 = 0.122\, W$$

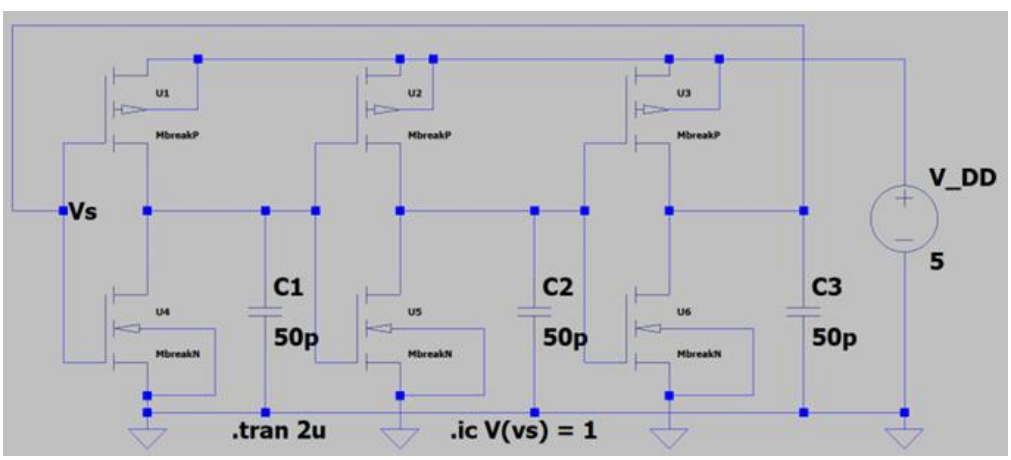

Figure 17: The 3-stage ring oscillator with 50 pF load Capacitors

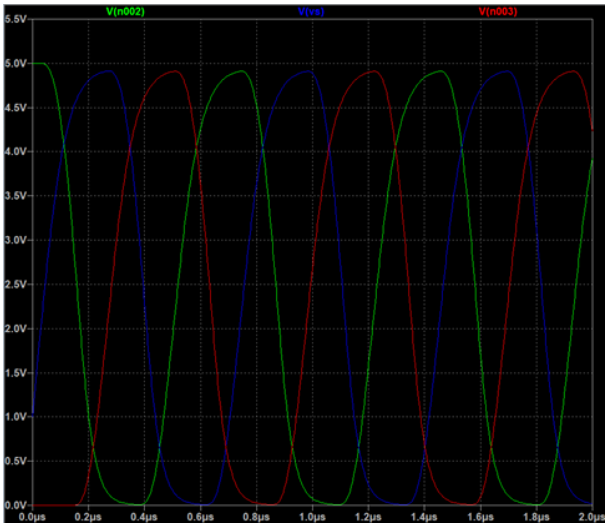

Figure 18: The Plot of Vin, Vout1 and Vout2

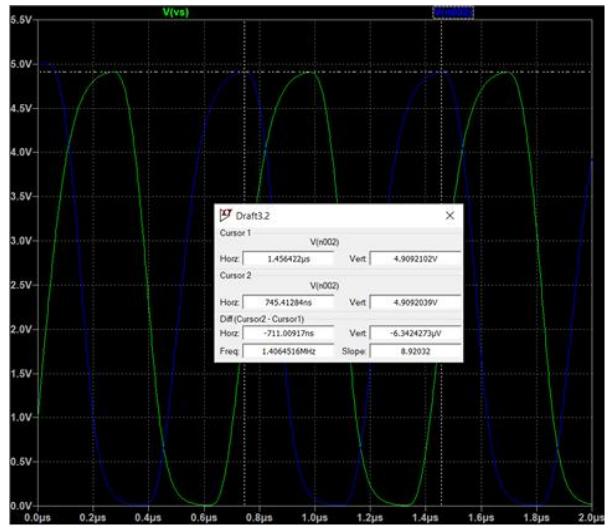

Figure 19: The Plot of Vin, Vout1 f = 1.4065 mHz

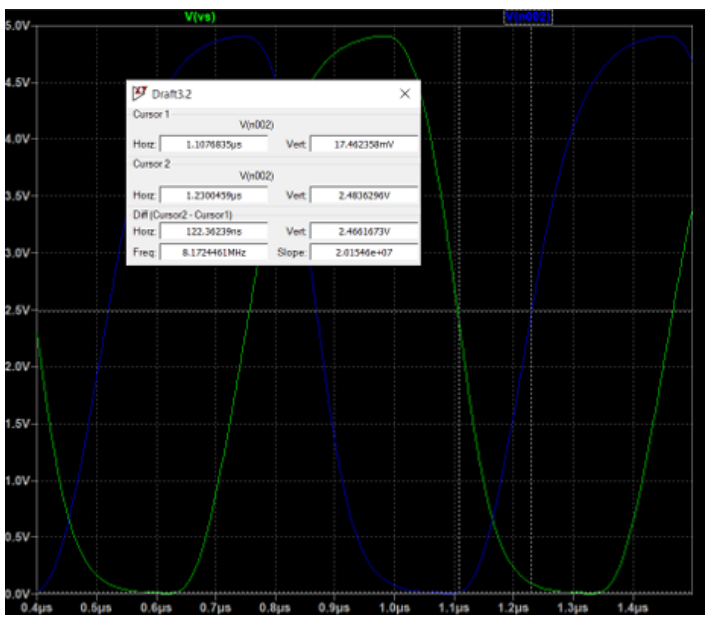

Figure 20: The Plot of Vin, $t_{PLH} = t_{PHL} = 122.362$ ns

As the load capacitance increases, the delay also becomes longer because a greater amount of time is needed to charge and discharge the larger capacitor. This extended delay consequently lowers the oscillation frequency of the circuit. From the simulation results, it can be observed that when the load capacitance was increased, the frequency dropped from 23.52 MHz to 1.4065 MHz, while the delay time rose significantly from 6.931 ns to 122.362 ns.

$$P_D = fCV_{DD}^2 = 1.4065 * 10^6 * 50 * 10^{-12} * 5^2 = 1.758\ mW$$

As shown by the formula above, an increase in capacitance causes the dynamic power P_D to rise linearly, since the circuit must charge and discharge a larger capacitance during each switching cycle. However, a higher capacitance also reduces the operating frequency. Consequently, when calculating P_D for circuits with smaller and larger capacitances, the circuit with the larger capacitance actually dissipates less power:

$$P_{Dsmaller} = 5.88\,mW > P_{Dbigger} = 1.758\,mW$$

Furthermore, when the supply voltage V_D increases, the power dissipation grows quadratically. This occurs because a higher voltage results in more energy being required to charge the capacitor during each switching event. This relationship can be verified from the data presented in Table.

6.2. Data of Experiment 6

6.2.1. Problem 1 – Voltage transfer characteristic of an Inverter

Figure 21: The Plot of V_{in} and V_{out}

6.2.2. Problem 2 – Propagation Delay of an Inverter

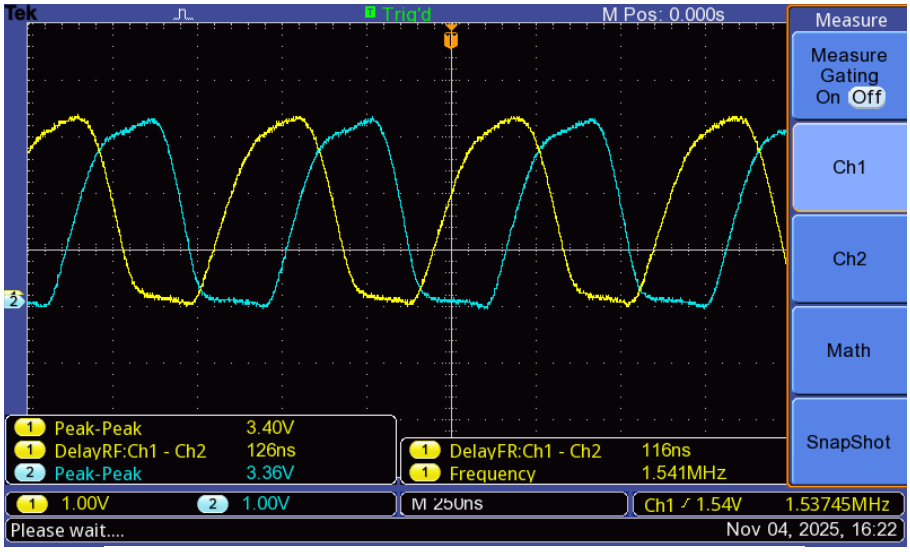

Figure 22: The plot of the first Inverter at 3V

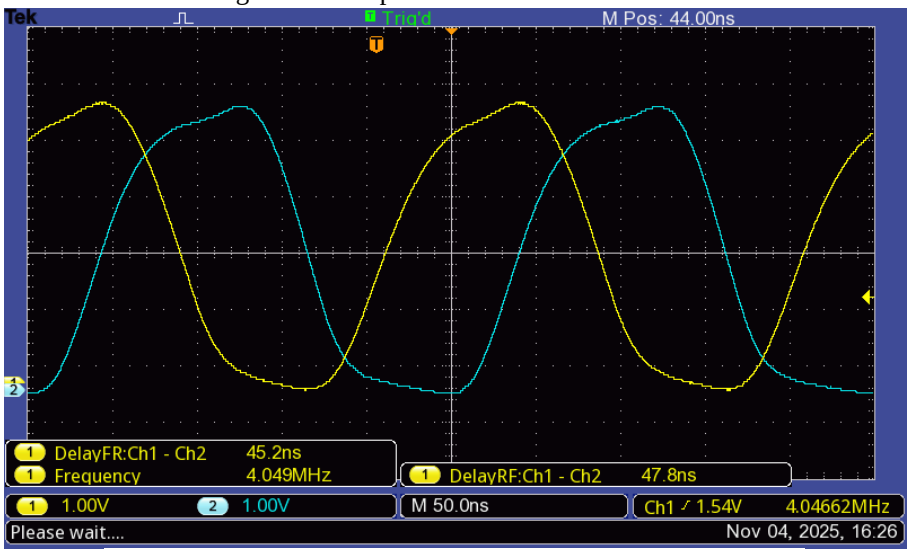

Figure 23: The plot of the first Inverter at 5V

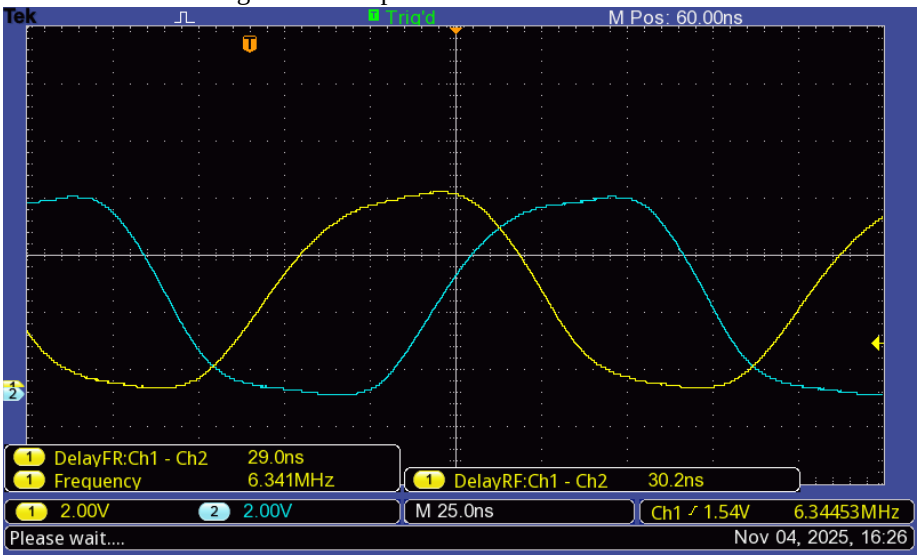

Figure 24: The plot of the first Inverter at 7V

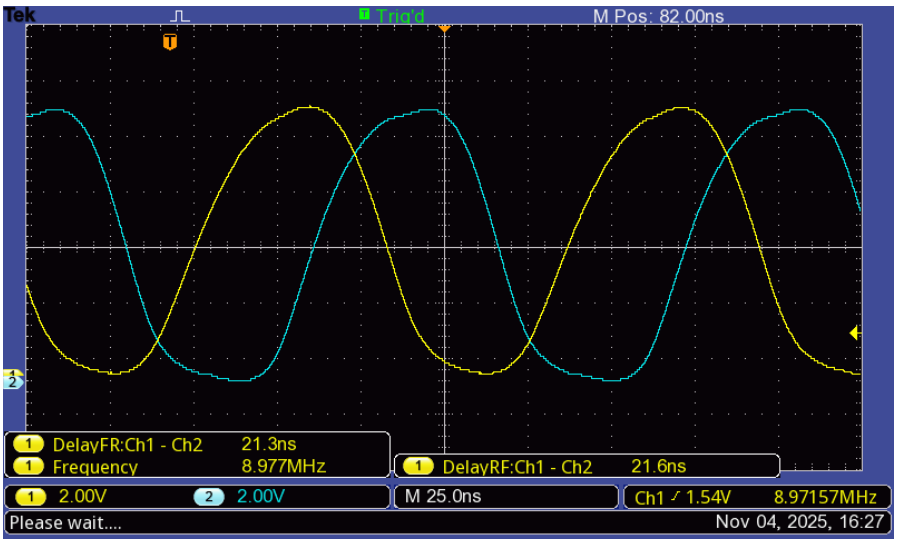

Figure 25: The plot of the first Inverter at 10V

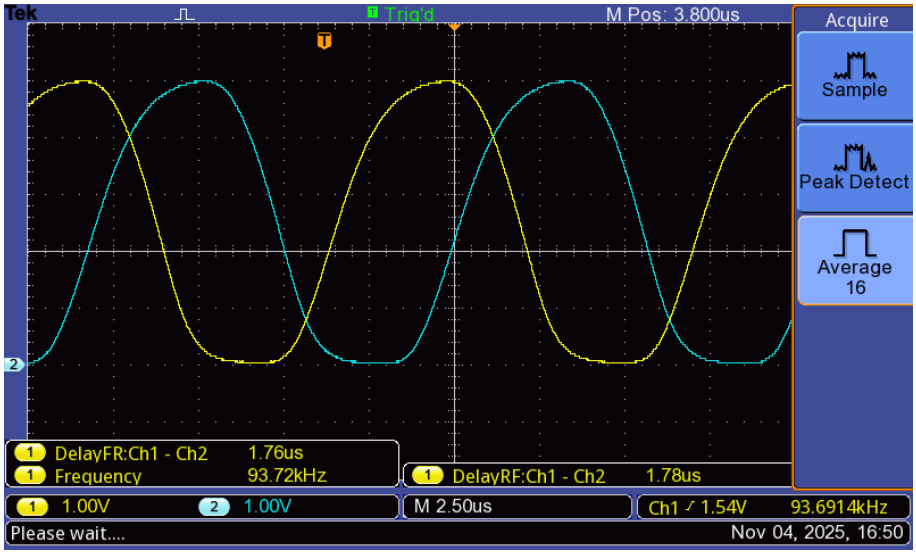

Figure 26: The Plot of the oscillation frequency and the propagation dealy